Marchio / Brand ZUCCHETTI

Classe / Class WW

SABLIER

ZSL739.X

Miscelatore monocomando lavabo incasso a 2 fori. / 2 hole built-in single lever basin mixer.

WATER SAVING

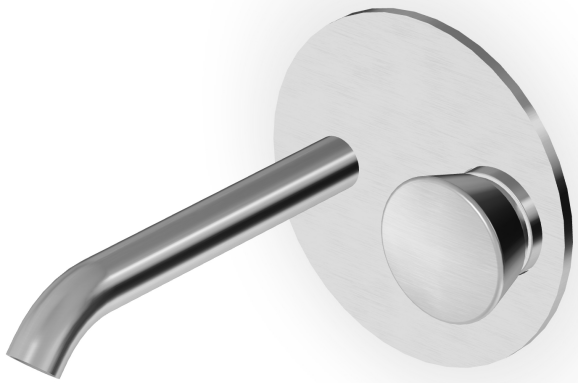

Miscelatore monocomando lavabo incasso a 2 fori, in acciaio inox AISI 316L, con aeratore. Lunghezza bocca 165 mm.
Water Saving - portata d'acqua uguale o inferiore a 6 l/min.

2 hole built-in single lever basin mixer in AISI 316L stainless steel, with aerator. Spout projection 165 mm.
Water Saving - water flow rate of 6 l/min or less.

R96720

Parte incasso / Built-in part

Marchio / Brand ZUCCHETTI

Classe / Class WW

SABLIER

ZSL739.X

Finiture / Finishes

X

Acciaio inox spazzolato / Brushed stainless steel

XP21

Brushed PVD chocolate / Brushed PVD chocolate

XP31

Brushed PVD British gold / Brushed PVD British gold

XP41

Brushed PVD gold / Brushed PVD gold

XP81

PVD Brushed Total Black / PVD Brushed Total Black

XP91

Brushed PVD copper / Brushed PVD copper

XS

Acciaio inox matt / Matt stainless steel

XSP21

Matt PVD chocolate / Matt PVD chocolate

XSP31

Matt PVD British gold / Matt PVD British gold

XSP41

Matt PVD gold / Matt PVD gold

XSP81

Matt PVD total black / Matt PVD total black

XSP91

Matt PVD copper / Matt PVD copper

Note / Notes

SABLIER

ZSL739.X Disegno Complessivo / Overall Drawing

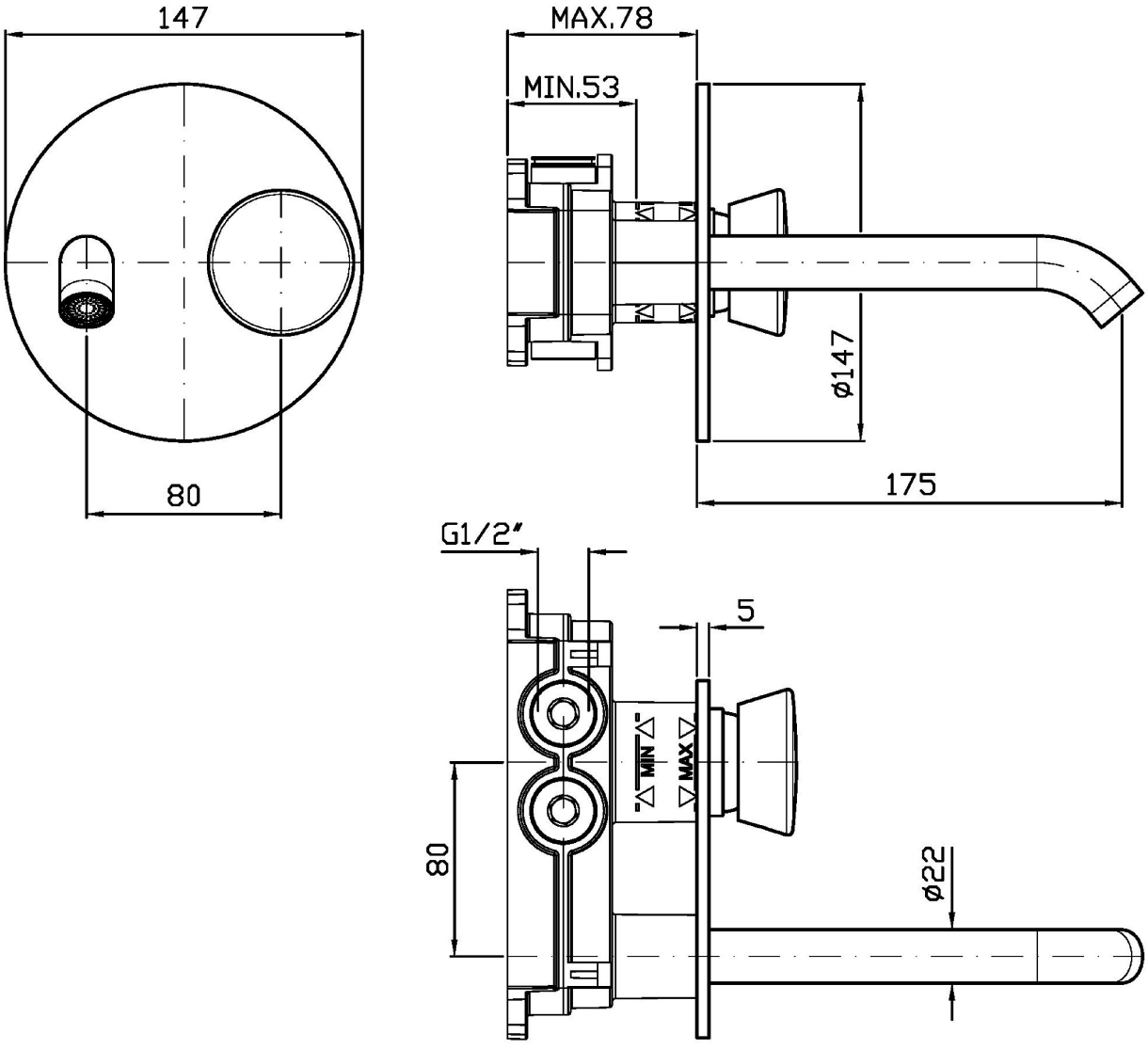

Marchio / Brand ZUCCHETTI

Classe / Class WW

SABLIER

ZSL739.X Esplosi / Exploded

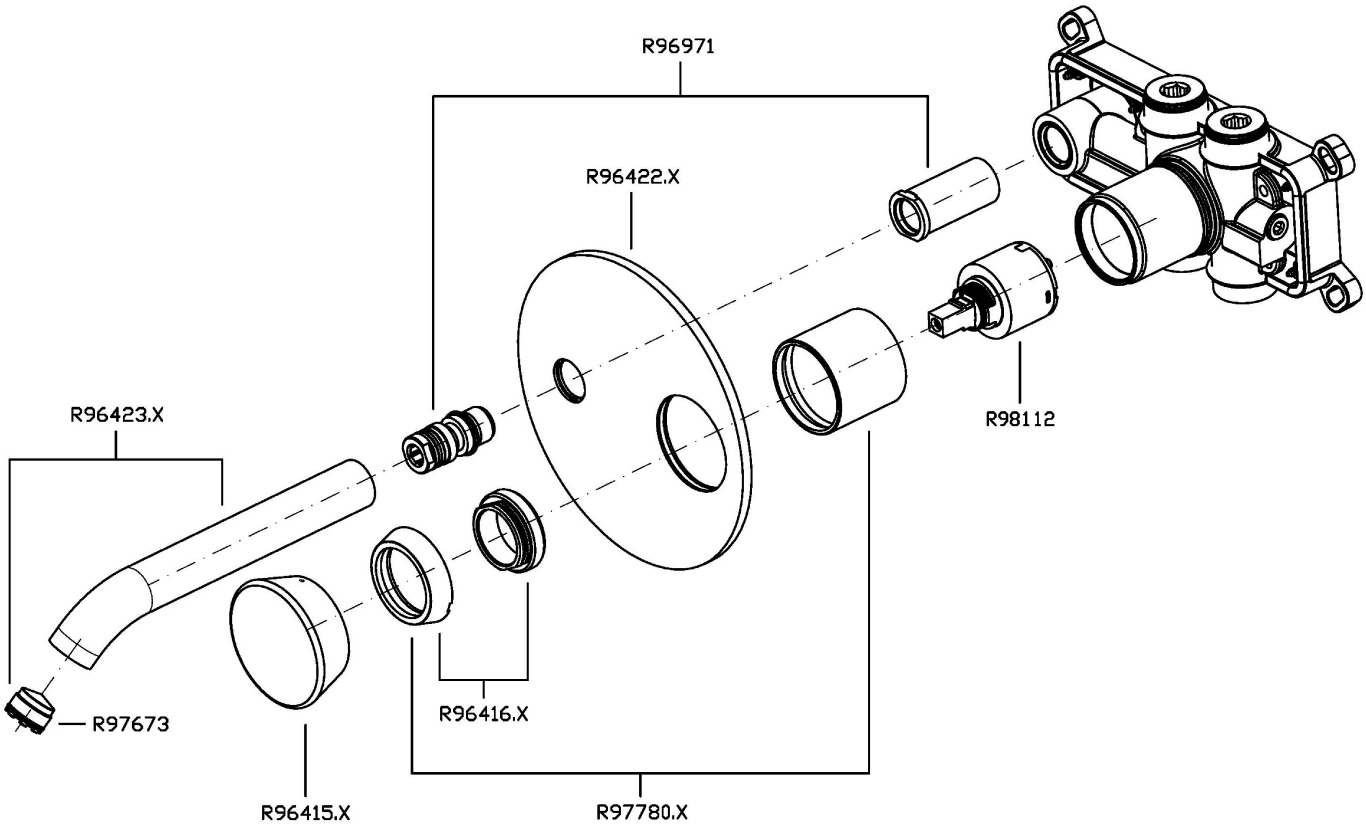

SABLIER

ZSL739.X Portate / Flowrates (lt/min)

PRESSIONE PRESSURE	1 BAR	2 BAR	3 BAR	4 BAR	5 BAR
P1 LAVABO BASIN	**2,9**	**3,8**	**4,2**	**4,3**	**4,5**
P2					
P3					
P4					
P5					

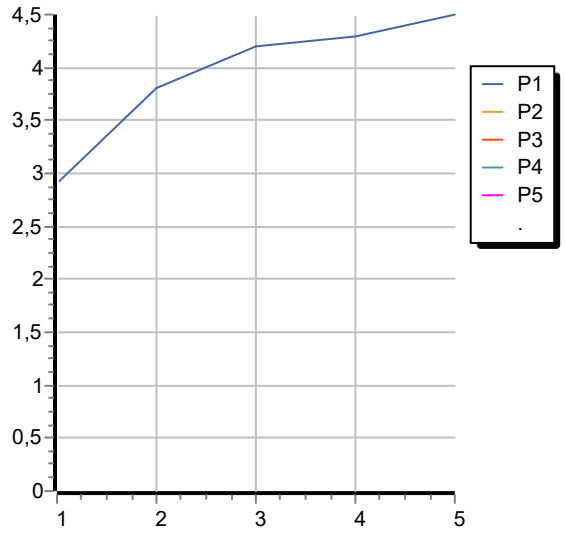

SABLIER

ZSL739.X Pesi e Misure / Weights and Sizes
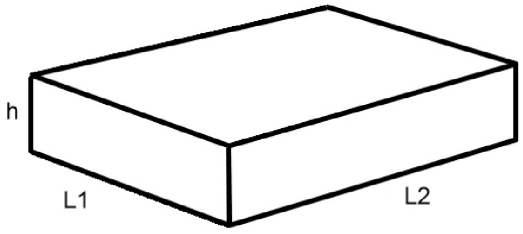
Peso (Kg) Weight (lb)	1,40 (Kg)	3,09 (lb)
Volume test (dc3) - (in3)	5,46 (dc3)	333,19 (in3)
h (mm) - (in)	130,00 (mm)	5,12 (in)
L1 (mm) - (in)	200,00 (mm)	7,87 (in)
L2 (mm) - (in)	210,00 (mm)	8,27 (in)